**North American**
Manufacturing Company

# Low NOx FLAT FLAME™ GAS BURNERS

Bulletin 4832

February 2000

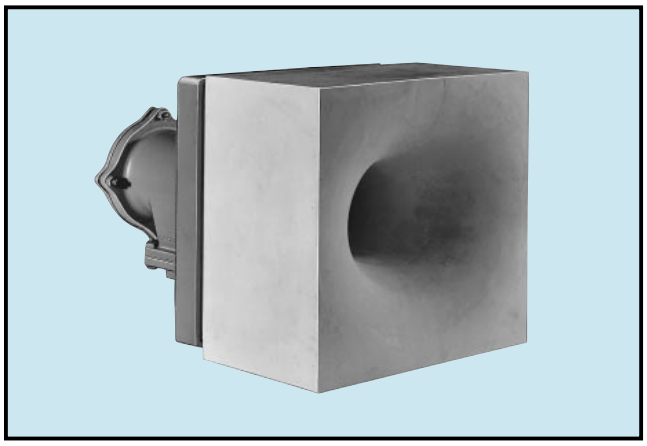

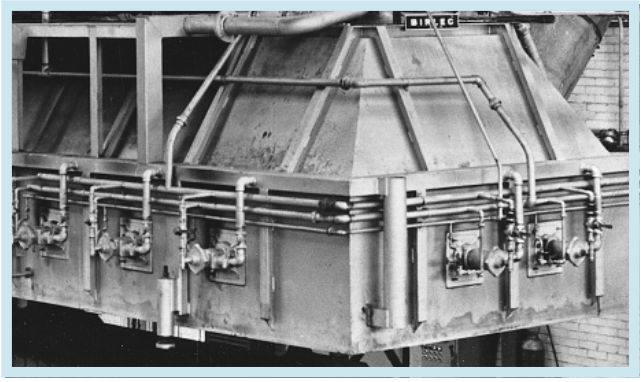

Flat Flame Burners make the refractory wall or roof in which they are installed a large, uniform heat radiating source that avoids hot spots on work as close as a foot away.

## APPLICATIONS

Burners produce disc-shaped, tangential flames that scrub adjacent refractory and have no forward velocity. The highly efficient radiation heat transfer created by this flame characteristic make Flat Flames particularly effective when mounted:

in the walls of:

- cover annealing furnaces
- galvanizing tanks
- crucible furnaces
- salt pots
- direct-fired heat exchangers (which otherwise require radiant tubes or elaborate baffling or brickwork to prevent flame impingement and hot spots on exchanger elements)

or in the roofs of:

- slab heaters
- glass tanks
- rotary hearth furnaces
- patenting furnaces

4832 and other North American Flat Flame Burners convert a refractory expanse into a radiating surface that is capable of high rates of heat transfer over wide areas. In appropriate applications, this results in faster, more uniform heating than traditional side or end firing can accomplish.

## OPERATING CHARACTERISTICS

4832 Burners are nozzle mixing, therefore cannot flash back; so turndown is limited only by accuracy of control system. Effective turndown can be extended by use of excess air at low fire.

Flame diameters are indicated below. Flame depth (forward travel) is less than 5" for any size when operated on stoichiometric ratio or lean.

Burners normally are selected for 12 osi or more air pressure at high fire to allow more turndown while still maintaining good flame spin characteristics.

Natural gas pressure required for stoichiometric operation at 16 osi air pressure is about 0.2"wc for 4832-2 through -5 and 4"wc for 4832-6 and -7.

**In tight, cold furnaces, 4832 Burners are not stable on stoichiometric air/gas ratio.** Alternatives during start-ups until furnace reaches approximately 1400 F:

1. Keep furnace doors open or otherwise provide free air in chamber, or
2. Operate 4832 Burner(s) on lean air/gas ratio, i.e., with excess air through the burner, or
3. Use the 4833 Flat Flame Burner, which has narrower air/gas ratio limits (it is available in the -3, -4, -5, and -6 sizes).
4. Consult North American for special cold, tight versions.

A 4832 Burner's flame spin creates back pressure within the burner mounting, so any unused holes in mounting must be plugged. If no pilot is ordered, burner is shipped with a pipe plug in the pilot opening.

| Burner designation | Combustion air capacities in scfh (for Btu/hr, multiply by 100) Air pressure drop across the burner in osi | | | | Max. % excess air without pilot | | | | Approx. visible flame diameter † inches |
|---|---|---|---|---|---|---|---|---|---|
| | 1 | 8 | 12 | 16 | 4 | 8 | 12 | 16 | |
| **4832-2** | 585 | 1 650 | 2 010 | 2 340 | 400 | 300 | 250 | 150 | 14 |
| **4832-3** | 885 | 2 500 | 3 050 | 3 540 | 290 | 190 | 150 | 100 | 16 |
| **4832-4** | 1450 | 4 100 | 5 000 | 5 800 | 250 | 220 | 150 | 140 | 23 |
| **4832-5** | 2370 | 6 700 | 8 150 | 9 500 | 250 | 250 | 250 | 300 | 25 |
| **4832-6** | 3710 | 10 500 | 12 900 | 14 800 | 500 | 500 | 500 | 500 | 30 |
| **4832-7** | 6550 | 18 500 | 22 700 | 26 200 | 500 | 500 | 300 | 280 | 34 |

For capacities to 6 600 000 Btu/hr (66 000 scfh air), refer to 4836-8-A and -8-B literature.

† In open cold furnace with burner operating at 16 osi air on stoichiometric ratio. Visible diameters decrease air on excess air; but spinning, flat characteristics are maintained.

## BURNER PLACEMENT

Burner spacing figures below are guidelines only. Burner placement is a function of furnace volume, required input, and other factors. Consult a North American engineer for help in burner selection and placement.

**Suggested burner spacing inches‡**

| Burner size | Tile-face-to-load min. | ℄ to ℄ min. | ℄ to ℄ max. |
|---|---|---|---|
| **-2** | 9 | 13 1/2 | 30 |
| **-3** | 9 | 16 | 36 |
| **-4** | 9 | 18 | 48 |
| **-5** | 11 | 24 | 62 |
| **-6** | 12 | 27 | 77 |
| **-7** | 14 | 33 | 100 |

‡ Spacing depends on desired input rate and shape of area to be heated, so these suggestions are only general guides. Tile-face-to-load spacing listed is a minimum to avoid flame impingement--in some cases better results will be realized with greater distances. Minimum center-to-center spacing will provide the highest concentration of heat. Maximum center-to-center spacing will provide broadest coverage without causing "cold" spots between burners.

## INSTALLATION

Face of Flat Flame™ Burner tile **must be flush** with inner surface of surrounding refractory wall or roof.

Tile length is 9". For thin furnace walls or roofs, special 4832 mounting-tile construction is shown on Dimensions 4832.

Standard tiles are 13 1/2" square: 24" square roof sections are shown in 4836 literature, and other configurations on Dimensions 4832.

Also on Dimensions 4832 are descriptions of 4832C Wall Mounting Flanges for shells of furnaces with wall thicknesses of 10" to 12". Suggested methods for roof mounting Flat Flame Burners are shown on Instructions 4832.

Flexible air and gas connections (Bulletin 8770) are recommended to compensate for expansion of furnaces and piping.

## FLAME SUPERVISION and PILOTS

Recommended pilot tip is 4021-12.

4051 Lighting Capabilities: 4832 burners can be ignited satisfactorily at low fire with the 4051 air enhanced igniter.

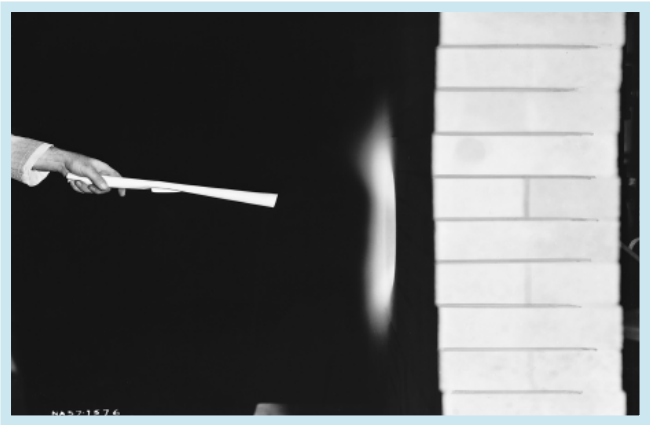

**No hot spot develops in front of a Flat Flame Burner, even at high fire. Heating is uniform over a wide area.**

UV flame monitoring is recommended for the 4832 Flat Flame Burner. With pilot ignition, the UV detector must be located downstream of the pilot relative to direction of burner flame spin (clockwise from rear of burner as shipped). With only one UV detector location, pilot burner must be interrupted after ignition of main flame.

## LOW $NO_X$

By their design, the 4832 and 4836 Flat flame Burners are inherently low $NO_X$. However, emission levels will vary from one application to another. Consult North American for information relating to your operating conditions.

## CONSTRUCTION

4832 Burners have cast iron bodies and heat-resistant iron mountings. All internals that see flame are stainless steel. Tiles are suitable for 3000 F tile temperature. They are supported by four alloy anchors attached to the mounting plate. See Dimensions 4832 for other tile choices.

An observation port is furnished if no flame detector is ordered with burner. On a burner equipped with pilot and flame detector, there is no provision in mounting for observation port; but a port (if ordered separately) can be installed in a tee at the gas connection, sighting through the gas tube.

For dual-fuel (gas and light oil) refer to 6832 and 6833 literature.

**Clearance Dimensions**
(for details, see Dimensions 4832)

| Burner designation | inches A | $C_1$ | E |
|---|---|---|---|
| **4832-2** | 1 1/4 | 9 1/16 | 21 1/4 |
| **4832-3** | 1 1/2 | 9 1/16 | 21 1/4 |
| **4832-4** | 2 | – | 21 1/4 |
| **4832-5** | 2 1/2 | 9 13/16 | 23 7/8 |
| **4832-6** | 3 | – | 23 7/8 |
| **4832-7** | 4 | – | 23 7/8 |

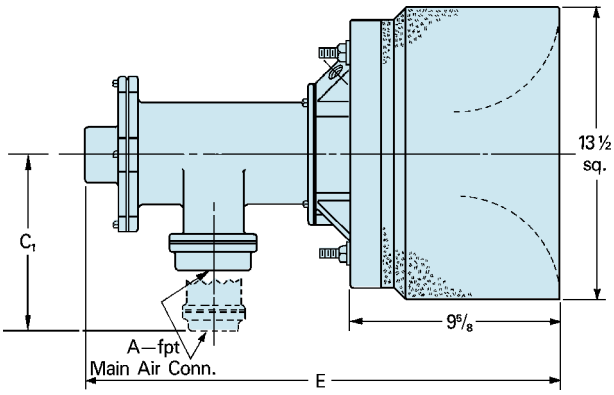


**WARNING:** Situations dangerous to personnel and property can develop from incorrect operation of combustion equipment. North American urges compliance with National Safety Standards and Insurance Underwriters recommendations, and care in operation.

North American Mfg. Co., 4455 East 71st Street, Cleveland, OH 44105-5600 USA, Phone 216-271-6000, Facsimile 216-641-7852
E-mail sales@namfg.com • www.namfg.com